COLLEGE OF LAKE COUNTY

Department of Engineering

EGR 260
Introduction to Circuit Analysis

Lab #2

Reported by: Anh Thong Le

Date Performed: February 5, 2026

Date Submitted: March 4, 2026

Submitted to: Dr. Regez

1 Objective

The objective of this experiment is understand the function of a ladder network circuit consisting of series and parallel components. This Experiment also finds unknown resistance value in the Wheatstone bridge, confirms kirchhoff's current law (KCL), kirchhoff's voltage law (KVL), and uses nodal analysis & mesh analysis to confirm lab measurements.

2 Equipment

- DC power supply
- Digital multimeter
- Resistors (four 2k resistors, two 1k resistors, one 4k resistor, and one 10k resistor)
- Breadboard
- Connecting wires

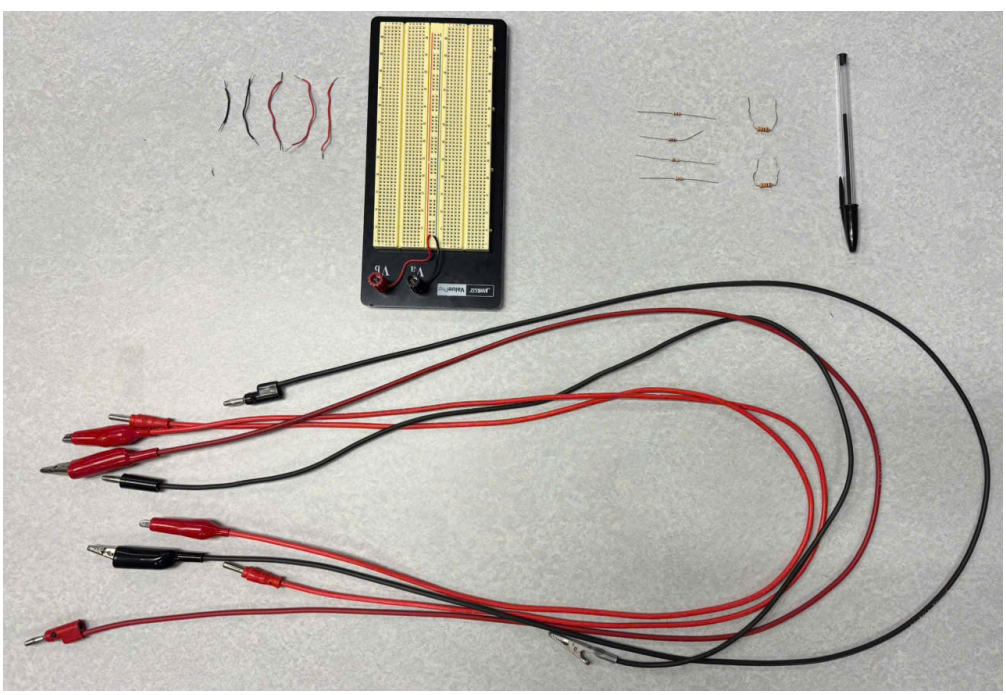

Figure 1: The picture displaying connecting wires, breadboard, male-to-male jumper wires, four straight 2k resistors, and two bended 1k resistors.

Figure 2: Two pictures displaying the BK Precision DC Power Supply (left) and the BK Precision Digital Multimeter (right) used in this experiment.

3 Experimental Procedure

3.1 Ladder Circuit

Figure 3 shows the schematic of the ladder circuit used in this experiment.

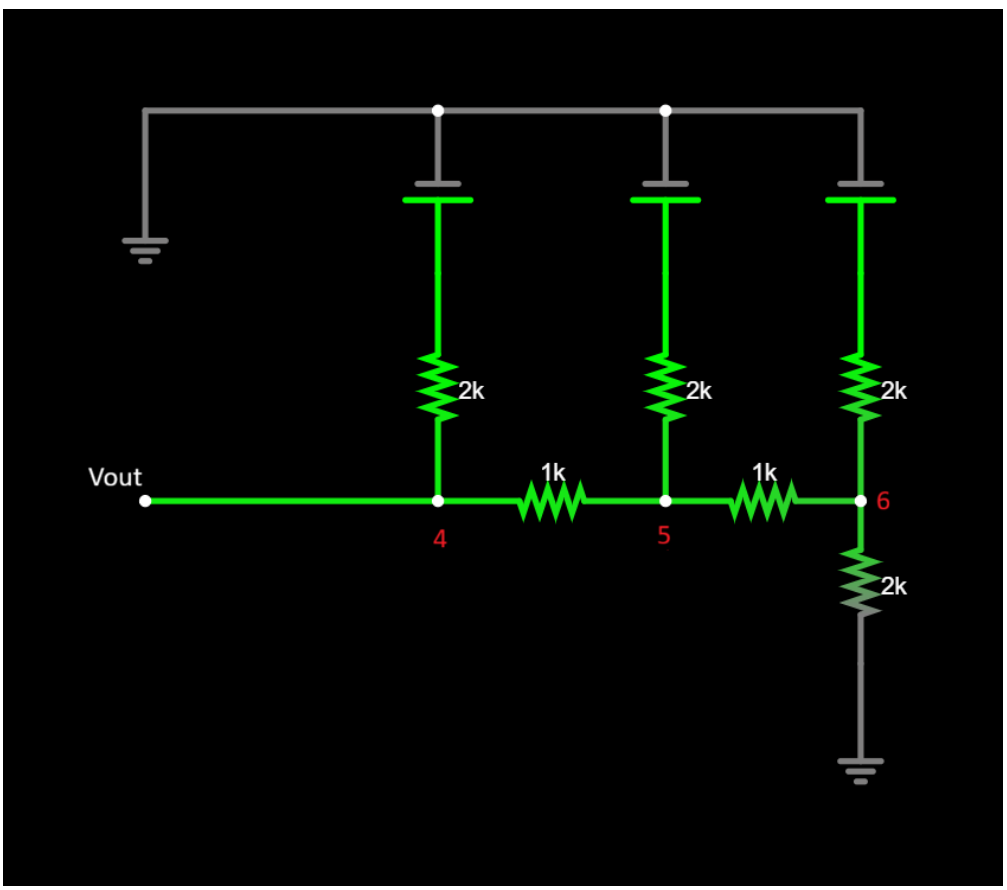

Figure 3: Ladder Circuit with V1, V2, and V3 from left to right

The procedure of Ladder circuit

1. The circuit was constructed according to the schematic shown in Figure **??**.
2. DC voltages were applied using the power supply according to Table 1.
3. Voltages at A and B were measured using a multimeter.
4. Measurements were repeated for multiple voltage levels.

3.2 Wheatstone Bridge Circuit

Figure 4 shows the schematic of the Wheatstone Bridge circuit used in this experiment.

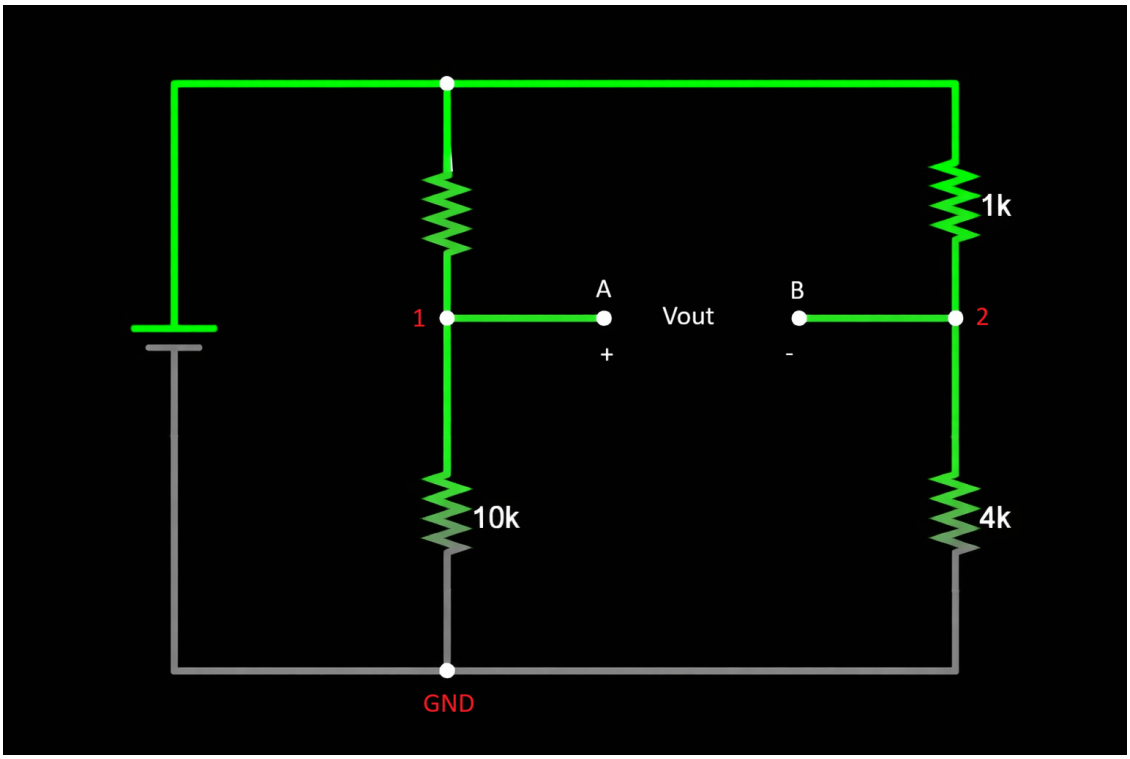

Figure 4: Wheatstone Bridge Circuit with 5V source with three known and an unknown resistance value

The procedure of Wheatstone Bridge circuit

1. The circuit was constructed according to the schematic shown in Figure 4.
2. Find the unknown resistance to balance the Wheatstone Bridge.
3. Measure all voltage and current drops in the bridge.

4 Analysis

4.1 Nodal and Mesh Analysis for the Ladder Circuit

To find ouput voltage in figure 3, use node-voltage method at node 6:

$$\frac{V_6 - 0}{2000} + \frac{V_6 - V_5}{1000} + \frac{V_6 - 5}{2000} = 0$$

$$-\frac{V_5}{2000} + \frac{V6}{500} = 0 \tag{04.01}$$

Similarly, at node 5

$$\frac{V_5 - V_4}{1000} + \frac{V_5 - 5}{2000} + \frac{V_5 - V_6}{1000} = 0$$

$$-\frac{V_4}{1000} + \frac{V_5}{400} - \frac{V_6}{1000} = \frac{1}{400} \tag{04.02}$$

Finally, at node 4

$$\frac{V_4 - V_5}{1000} + \frac{V_4 - 5}{2000} = 0$$

$$\frac{3V_4}{2000} - \frac{V_5}{1000} = \frac{1}{400} \tag{04.03}$$

Solve for V4, V5, and V6 using (04.01), (04.02), and (04.03):

$$V_6 = 3.281\,\mathrm{V}$$

$$V_5 = 4.063\,\mathrm{V}$$

$$V_{out} = V_4 = 4.375\,\mathrm{V}$$

As V_{out} is equal to V_4, we confirmed the simulated value using nodal analysis.

4.2 KCL and KVL for the bridge circuit

To find the unknown resistance in figure 4, let the unknown, 1k, 10k, and 4k resistors be Rx, R2, R3, and R4, respectively. In a balanced bridge, the voltage drop at Rx is equal to that at R2:

$$V_x = V_2$$

According to Ohm's Law:

$$i_x R_x = i_2 R_2 \tag{04.04}$$

Similar analysis with R3 and R4:

$$i_3 R_3 = i_4 R_4 \tag{04.05}$$

Let (04.04) divided by (04.05):

$$\frac{i_x R_x}{i_3 R_3} = \frac{i_2 R_2}{i_4 R_4} \tag{04.06}$$

Additionally, current flowing in equals to current leaving the nodes (KCL). Therefore:

$$i_x = i_3 \quad ; \quad i_2 = i_4$$

Back to (04.06):

$$\frac{R_x}{R_3} = \frac{R_2}{R_4} \tag{04.07}$$

After rearranging:

$$R_x = \frac{R_2}{R_4} R_3 = \frac{10k}{4k}(1k) = 2.5k\Omega$$

Using KCL to confirm

Let node 1 be the node between 2.5k and 10k resistors and node 2 be the node between 1k and 4k resistors. At node 1:

$$\frac{V_1 - 0}{10000} + \frac{V_1 - 5}{2500} = 0$$

Rearranging:

$$\frac{V_1}{2000} = \frac{1}{500}$$

Therefore:

$$V_A = V_1 = 4\,\mathrm{V} \tag{04.08}$$

As Similarly, at node 2:

$$\frac{V_2 - 5}{1000} + \frac{V_2 - 0}{4000} = 0$$

Rearranging:

$$\frac{V_2}{800} = \frac{1}{200}$$

Then:

$$V_2 = 4\,\mathrm{V} \quad ; \quad V_B = -4\,\mathrm{V} \tag{04.09}$$

With the voltage value at A (04.08) and B (04.09), calculate the output Voltage:

$$V_{out} = V_A + V_B = 4 + (-4) = 0$$

Therefore, the Wheatstone bridge is balanced as there is no difference in the magnitude of

voltage at A and B.

5 Data

5.1 Simulation and measurement values

V1	V2	V3	Vout (simulated)	Vout (measured)
0 V	0 V	0 V	0 V	0.00488 V
0 V	0 V	5 V	0,625 V	0.913 V
0 V	5 V	0 V	1.25 V	1.667 V
0 V	5 V	5 V	1.875 V	2.393 V
5 V	0 V	0 V	2.5 V	2.757 V
5 V	0 V	5 V	3.125 V	3.393 V
5 V	5 V	0 V	3.75 V	3.903 V
5 V	5 V	5 V	4.375 V	4.458 V

Table 1: Simulated and measured voltage values for the ladder circuit

	R_x	R2	R3	R4	Vout (A+ term, B- term)
Resistance	2.5k Ω	1k Ω	10k Ω	4.0k Ω	0 V
Voltage drop	1 V	1 V	4 V	4 V	0 V
Current	4E-04 A	0.001 A	4E-04 A	0.001 A	0 V
Power	4E-04 W	0.001 W	0.0016 W	0.004 W	0 V

Table 2: Simulated values for Wheatstone Bridge Circuit

	R_x	R2	R3	R4	Vout (A+ term, B- term)
Resistance	2.512k Ω	0.931k Ω	10.042k Ω	4.023k Ω	0.0012 V
Voltage drop	1.021 V	1.014 V	4.002 V	4.031 V	0.0012 V
Current	3.981E-04 A	0.0011 A	3.983E-04 A	9.943E-04 A	0.0012 V
Power	3.98E-04 W	0.0011 W	0.00159 W	0.003977 W	0.0012 V

Table 3: Measured values for Wheatstone Bridge Circuit

6 Graphs

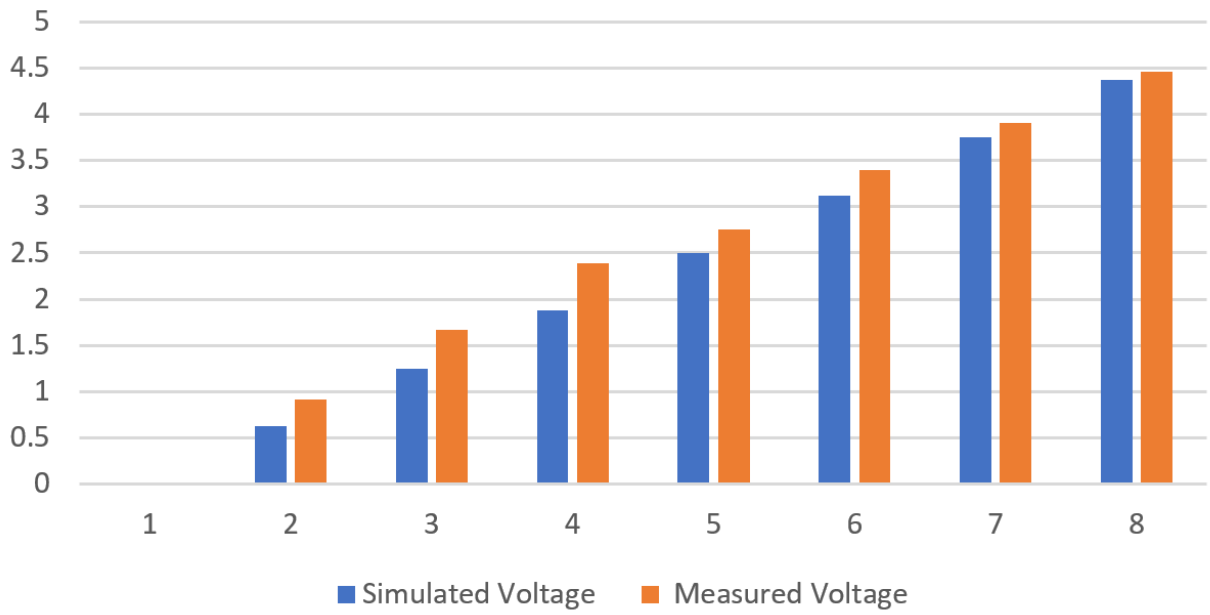

Figure 5: The bar chart displaying the measured voltage compared to the simulated voltage in the Ladder Circuit (Figure 3).

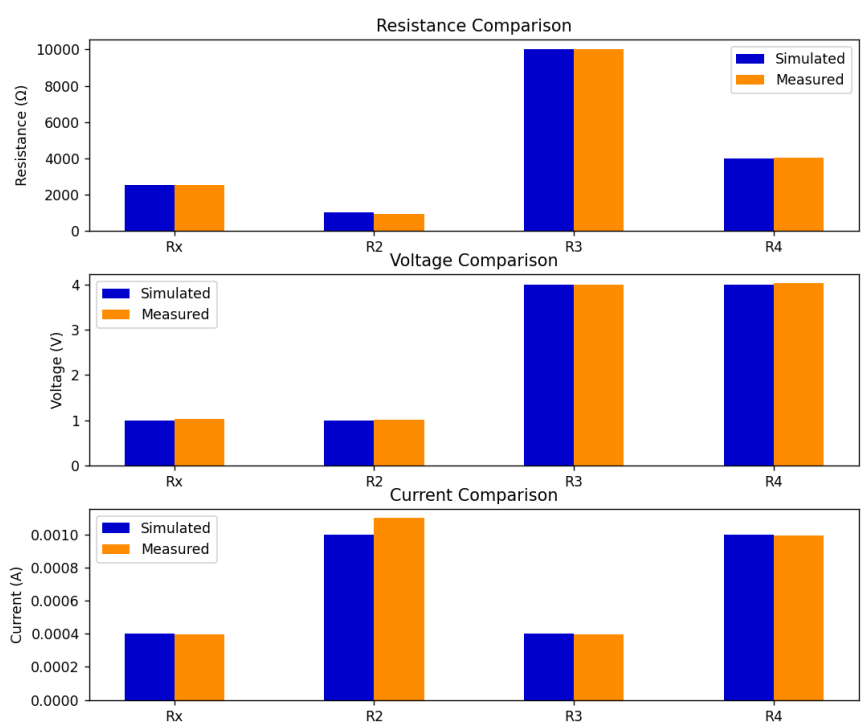

Figure 6: The bar charts demonstrating the simulated values compared to measured values for Resistance, Voltage, and Current in the Wheatstone Bridge Circuit (Figure 4).

7 Discussion and Conclusions

7.1 Relationship

The ladder network demonstrated a clear linear relationship (Figure 5) between the input voltage combinations and the output voltage V_{out}. From the simulated results, the output increased in equal increments of 0.625 V, indicating that the circuit behaves as a linear resistive network and confirming that the physical circuit behaves consistently with theoretical predictions derived from nodal analysis.

7.2 Experimental and Simulated Results

For the ladder circuit, the measured values were reasonably close to the simulated values. The differences were generally small and increased slightly at higher voltages, but the overall trend remained linear. The discrepancies can be attributed to:

- Resistor tolerance (typically ±5%)
- Internal resistance of the multimeter
- Breadboard contact resistance
- Slight variations in the power supply output

Despite these small differences, the percent error remained relatively low, confirming the simulated value using nodal analysis. While the measured voltage difference between the midpoints is 0.0012 V, this value is very close zero, which is the simulated output voltage.

7.3 Conclusion

Overall, the experiment is confirmed by using KCL, KVL with nodal and mesh analysis within acceptable experimental error. While the ladder circuit showed that linear resistive networks (consisting of series & parallel components) produce predictable and proportional output voltages, the Wheatstone Bridge analysis showed how unknown resistance can be determined by the equation (04.07):

$$\frac{R_x}{R_3} = \frac{R_2}{R_4}$$